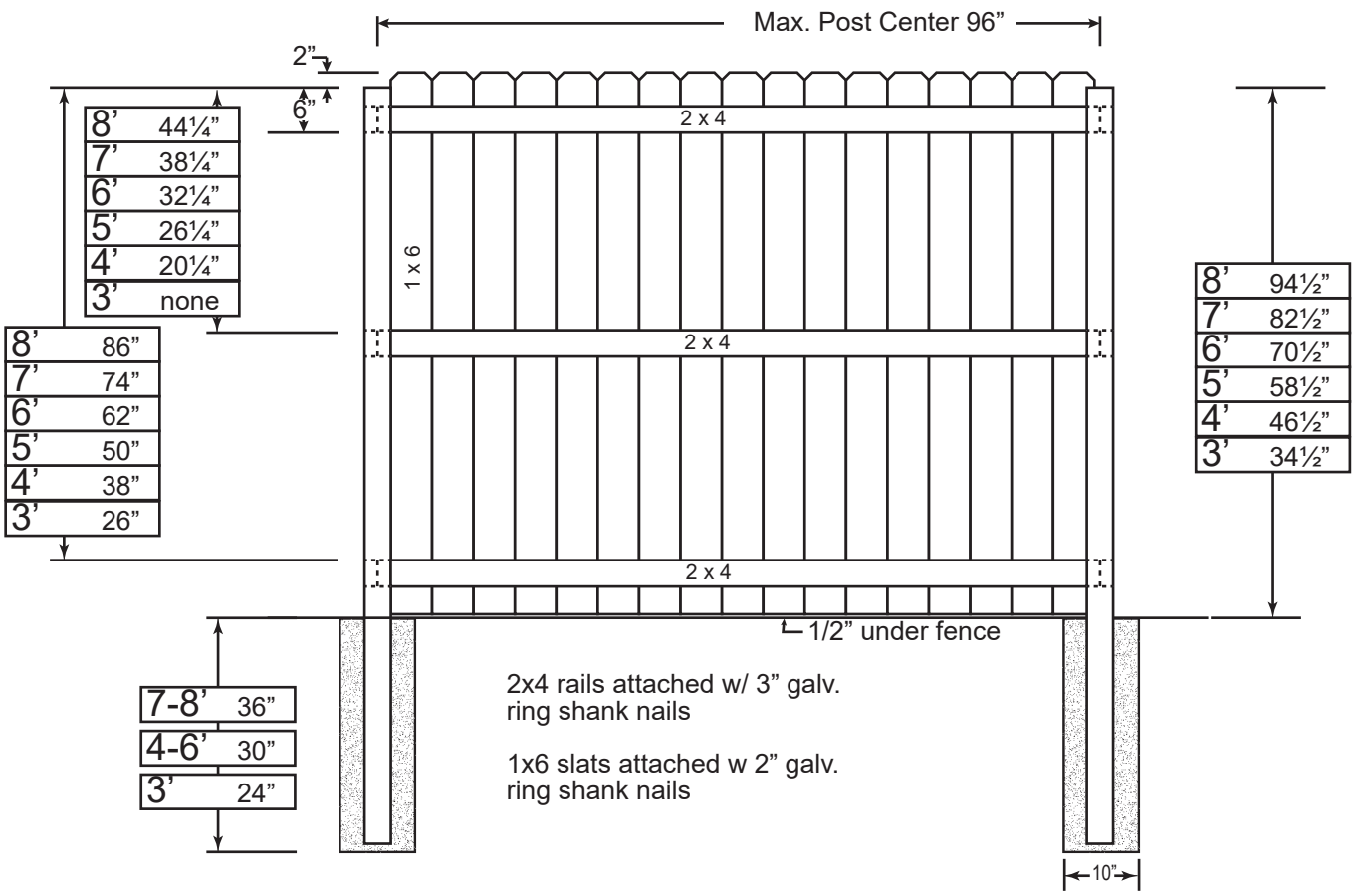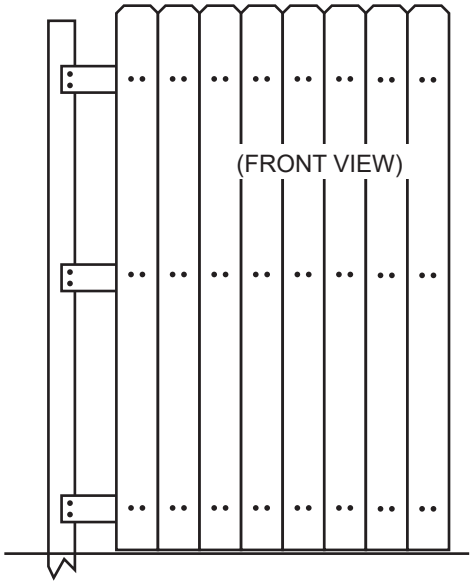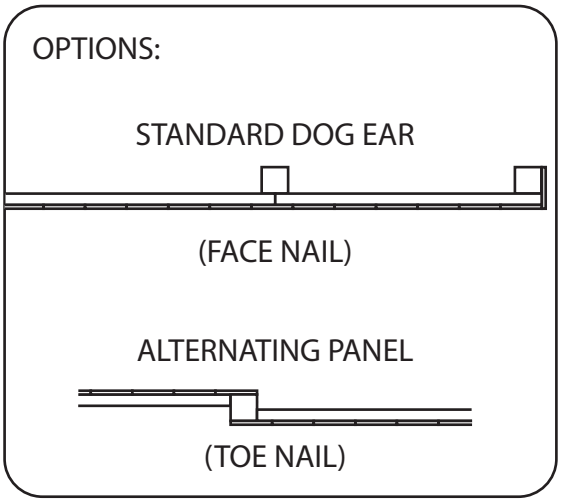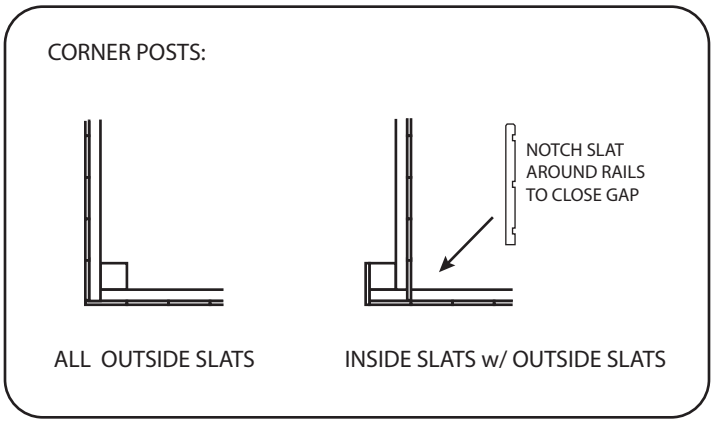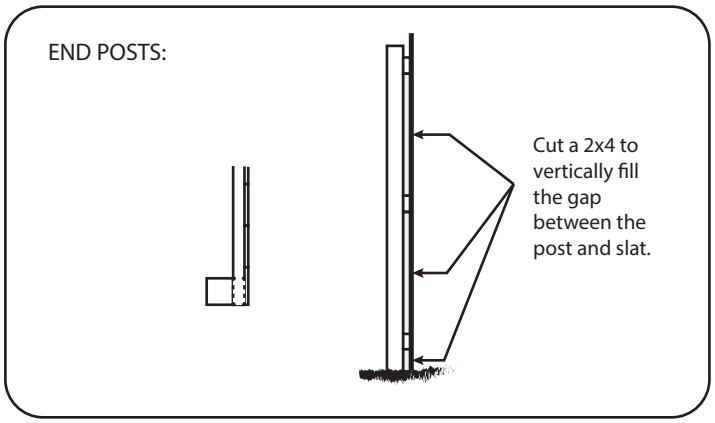DOG EAR FENCE